TEXAS INSTRUMENTS

Multi Usage Transponder (MUSA)

RI-TRP-M9WK

Reference Guide

TI-RFid
A TEXAS INSTRUMENTS TECHNOLOGY

December 2007

SCBU043 (11-09-21-072)

Multi Usage Transponder (MUSA)

RI-TRP-M9WK

Reference Guide

TI-RFid
A TEXAS INSTRUMENTS TECHNOLOGY

Literature Number: SCBU043 (11-09-21-072)
December 2007

Texas Instruments

Contents

Preface **7**

1 Product Description **9**

1.1 General 10
1.2 Transponder Packaging 10
1.3 Associated Documents 11
1.4 Transponder Marking 11
1.5 System Description 12
1.5.1 General 12
1.5.2 Reader (Interrogator) 12
1.6 Method of Operation 13
1.6.1 Initialization 13
1.6.2 Read Mode (General Read) 13
1.6.3 Selective Addressing (Password Protection) 13
1.6.4 Special Addressing (Pages 11 and 12) 13

2 Functional Description **15**

2.1 Hardware Description 16
2.2 Memory Architecture 16
2.2.1 Page 1 –Password 17
2.2.2 Page 2 –User Data 1 17
2.2.3 Page 3 – Unique Identification (Serial No., Man. Code) 17
2.2.4 Pages 8 to 10 –User Data 2, 3, and 4 18
2.2.5 Pages 11 and 12 – User Data 5 and 6 18

3 User Command Set **19**

3.1 MUSA Command Set 20
3.1.1 Pulse Width Modulation 20
3.1.2 Cyclic Redundancy Check Generator 22

4 Transponder Data Formats **25**

4.1 General 26
4.2 Charge 26
4.3 Write 26
4.3.1 Pulse Width Modulation (PWM) 26
4.3.2 Write Data Formats 28
4.4 Read 32
4.4.1 Read Data Formats 33

5 Measurement Setups **37**

5.1 Resonance Frequency, Bandwidth, Q Factor 38
5.2 Powering Field Strength 39
5.3 Transponder Signal Strength 40

6 Specifications **41**

6.1 Absolute Maximum Ratings 42
6.2 Reader Conditions 42
6.3 Recommended Operating Conditions 43

6.4 Transponder Characteristics 43
6.5 Environmental Data and Reliability 44
6.6 Memory 45
6.7 Packaging 46

A Conversion Formulae 47

List of Figures

1-1 System Configuration Showing Reader, Antenna, and Transponder 10
1-2 Musa Wedge – Dimensions (in mm) 11
1-3 RF Module – Block Schematic of TMS3505A IC 12
2-1 Transponder Block Schematic 16
3-1 PWM in the Case of Writing Data 21
3-2 PWM in the Case of a General Read 22
3-3 Block Schematic of CRC Generator 23
3-4 Subroutine Generate Block Check Character 24
4-1 Timing of Write Function 26
4-2 Voltage at the Reader and Transponder Coils During Typical Function 27
4-3 Format of General Read Pages 1 to 12 30
4-4 Format of Selective Read Page 30
4-5 Format of Special Addressing Read 30
4-6 Format of Program Page 1 and 2 31
4-7 Format of Selective Program Page 1 and 2 31
4-8 Format of Program Page 8 to 10 31
4-9 Format of Selective Program Page 8 to 10 31
4-10 Format of Special Addressing Program Pages 11 and 12 31
4-11 Format of General Lock Page 32
4-12 Format of Selective Lock Page 32
4-13 Format for Special Addressing Lock Page 32
4-14 FM Principle Used for the Read Function of Transponders 33
4-15 Response to Read of Pages 1, 2, or 3 35
4-16 Response to Read of Pages 8 to 12 36
4-17 Response to General Read of Page 11 (Status) 36
4-18 Response to General Read of Page 12 (LSByte) 36
5-1 Setup to Determine MUSA. Resonance Frequency, Bandwidth and Quality Factor 38
5-2 Determining Res. Freq. and –3 dB BW by Monitoring the Pick-Up Coil Voltage 38
5-3 Test Setup for Powering Field Strength Determination 39
5-4 Received Signal at the Pick-up Coil, If Power Field Strength Is Sufficient 40
5-5 Determining Tsp. (Data Transmission) Signal Strength Helmholtz Aperture 40
5-6 Monitored Signal Voltage at the Spectrum Analyzer (Time Domain Mode) 40

List of Tables

2-1 MUSA Memory Configuration 17
3-1 Command Set 20
4-1 Overview of Content of Write Data Formats 28
4-2 Write Address Combinations of Page and Command 29
4-3 Summary of Write Addresses 30
4-4 Overview of the Content of Read Data Formats 33
4-5 Meaning of Page and Status Field in the Read Address 34
4-6 Summary of Read Addresses 35
6-1 Absolute Maximum Operating Conditions 42
6-2 Reader Conditions 42
6-3 Transponder Conditions 43
6-4 Transponder Characteristics 43
6-5 Environmental Data and Reliability 44
6-6 Memory Data 45
6-7 Default Data Values 45
6-8 Package Data 46

Edition One – July 2007

This is the first edition of this manual which describes the following device:

Multi Usage Transponder (MUSA) RI-TRP-M9WK

Texas Instruments (TI) reserves the right to make changes to its products or services or to discontinue any product or service at any time without notice. TI provides customer assistance in various technical areas, but does not have full access to data concerning the use and applications of customers' products.

Therefore, TI assumes no liability and is not responsible for customer applications or product or software design or performance relating to systems or applications incorporating TI products. In addition, TI assumes no liability and is not responsible for infringement of patents and/or any other intellectual or industrial property rights of third parties, which may result from assistance provided by TI.

TI products are not designed, intended, authorized or warranted to be suitable for life support applications or any other life critical applications, which could involve potential risk of death, personal injury or severe property or environmental damage.

The **TI-RFid**™ logo, the word **TI-RFid™** are trademarks or registered trademarks of Texas Instruments Incorporated.

Copyright 2007 Texas Instruments Incorporated (TI)

This document may be downloaded onto a computer, stored and duplicated as necessary to support the use of the related TI products. Any other type of duplication, circulation or storage on data carriers in any manner not authorised by TI represents a violation of the applicable copyright laws and shall be prosecuted.

About This Manual

This manual describes Texas Instruments' Multi Usage Transponder (MUSA) RI-TRP-M9WK, it provides the information that you will need in order to use the transponder in your RFID system. It is generally targeted at systems integrators.

Conventions

WARNING

A WARNING IS USED WHERE CARE MUST BE TAKEN, OR A CERTAIN PROCEDURE MUST BE FOLLOWED, IN ORDER TO PREVENT INJURY OR HARM TO YOUR HEALTH.

CAUTION

This indicates information on conditions which must be met, or a procedure which must be followed, which, if not heeded, could cause permanent damage to the equipment or software.

Note: Indicates conditions which must be met, or procedures which must be followed, to ensure proper functioning of the equipment or software.

Note: Information: Indicates information which makes usage of the equipment or software easier.

If You Need Assistance

For more information, please contact the sales office or distributor nearest you. This contact information can be found on our web site at: http://www.ti-rfid.com.

Product Description

This chapter introduces you to Texas Instruments' MUSA Transponder. It describes the product itself, how it works and its method of operation.

Topic **Page**

1.1 General 10
1.2 Transponder Packaging 10
1.3 Associated Documents 11
1.4 Transponder Marking 11
1.5 System Description 12
1.6 Method of Operation 13

1.1 General

Texas Instruments' MUSA is a 12-mm plastic wedge shape package that can be used for a variety of applications, such as security systems, door and other electronic locks. It is suitable for those applications a where a small sized, high memory device that can operate close to metal, is required. It is one product in the Low Frequency RFID product line.

The basic principle is shown in Figure 1-1. The Reader turns on its transmitter to power and activate the transponder (tag) and modulates the transmission to inform the tag if it is to execute a Read, Write or Lock operation. The tag then responds with the requested data or status information to inform the reader about the success of the command.

Additionally, if the Selective password is set, the MUSA will only respond to Write and Lock commands addressed with that password.

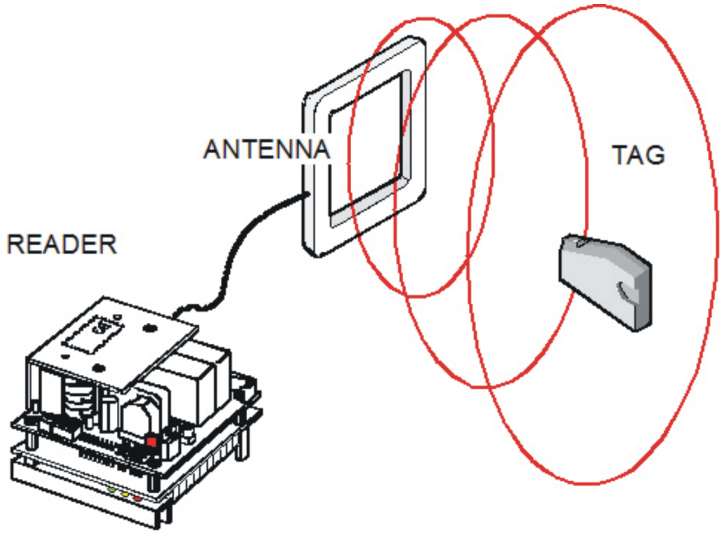

Figure 1-1. System Configuration Showing Reader, Antenna, and Transponder

The transponder has a 248-bit non-volatile memory divided into 8 pages (numbered 1 to 3 and 8 to 12) for the use or storage of:

- 8 bit selective address (password)
- 24 + 8 bit unique identification (e.g., serial number and manufacturer code)
- 128-bits normal memory
- 80-bits special addressed memory

1.2 Transponder Packaging

The dimensions of the transponder are given in Figure 1-2. The transponder housing material is IC mold compound. Notches allow the fixation of clips to assist in mounting or the addition of second packaging.

To ensure optimal coupling to the transmit/receive antenna of the transceiver unit, the axis of the Musa transponder should be pointing at the antenna.

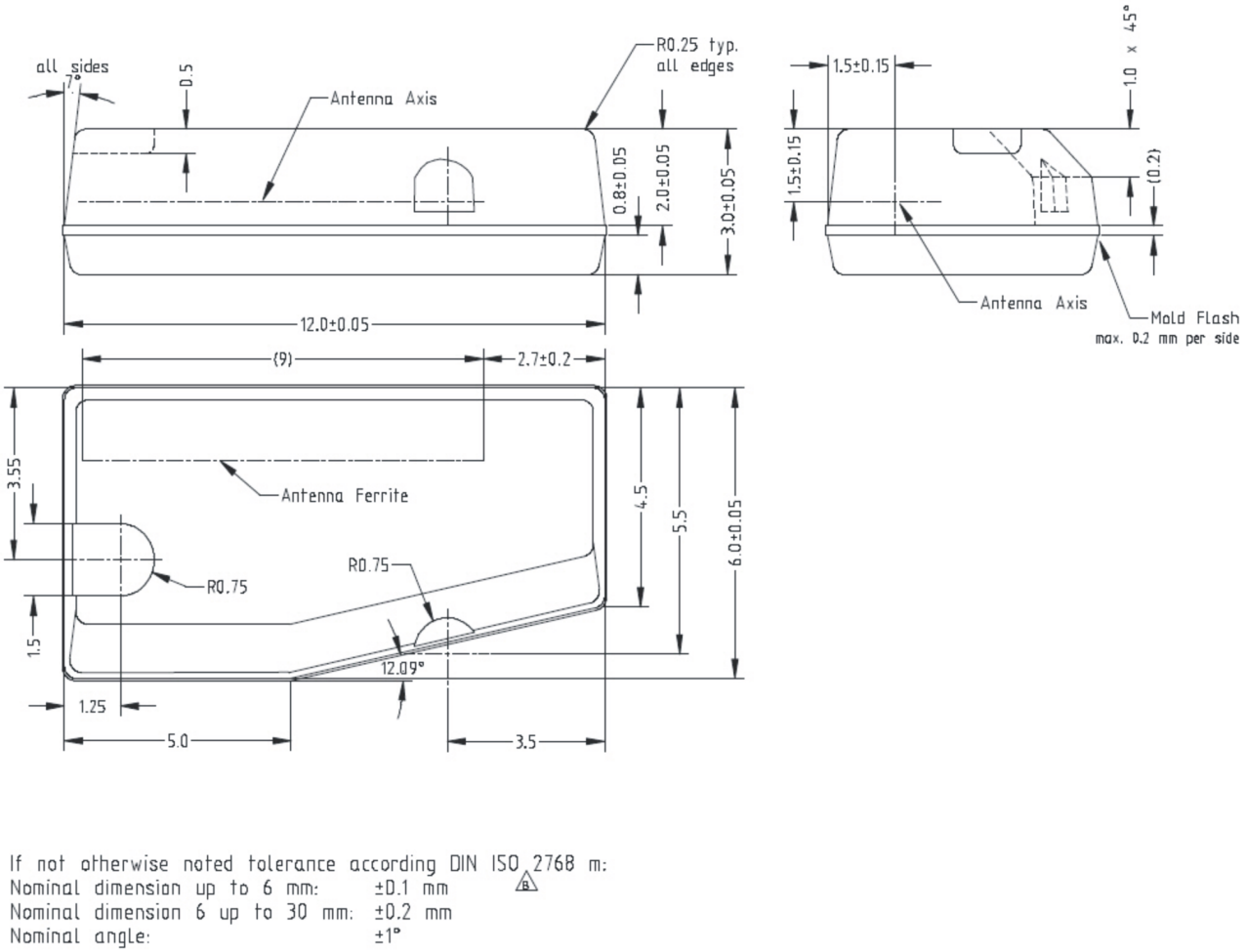

Figure 1-2. Musa Wedge – Dimensions (in mm)

1.3 Associated Documents

1. TMS3705A Transponder Base station IC.
2. Integrated RF Module TMS3705A Instruction to low frequency reader (Application Note), 11- 07- 26- 001.
3. MicroReader Reference Guide, SCBU027.
4. MUSA Commands using the MicroReader, 11-06-26-009.

1.4 Transponder Marking

The MUSA Transponder will be marked with an abbreviated product code according to the following marking scheme:

Product Code: RI-TRP-M9WK-xz

Marking: M-xzwwy,

Where: xz = Product Revision, ww = Production Week Coding, y = Production Year Coding.

Marking is applied to the underside of the device (opposite side to the notch).

Example: Product: RI-TRP-M9WK-00, produced in week 13, 2007. Marking: M-00137.

1.5 System Description

1.5.1 General

The method of operation requires the Reader (interrogator) to send a charge-up signal together with Write Address information. The Write Address information contains a page number and a command, to instruct the tag which operation to perform on that page. Valid operations include, Reading, Writing (programming) and Locking pages

Programming can be made even more secure by the use of the password feature. If the password feature is enabled, the Reader must first send the correct selective address to the transponder (together with the charge-up) before the transponder can be programmed. However, use of the selective address for read operation is optional, even if the password feature is enabled.

1.5.2 Reader (Interrogator)

The choice of reader, very much depends on the application. The MicroReader [RI-STU-MDR1] can be used for mid range applications or an RF module can be built using the RF Module IC TMS3705A [1], [2]. An RF module has two parts: the transmitter and the receiver, both of which are connected to the same antenna circuit (see Figure 1-3).

The transmitter is used for contactless supply of energy to the transponder (charge phase), for transmission of data to the transponder (write phase) using pulse width modulation (PWM) and to program and lock the transponder memory (program phase). It is controlled by the active low transmit control input (TXCT–).

The receiver demodulates the transponder response signal (read phase), which is modulated using Frequency Shift Keying (FSK). The RFM TMS3705A provides a serial communication interface output (SCIO).

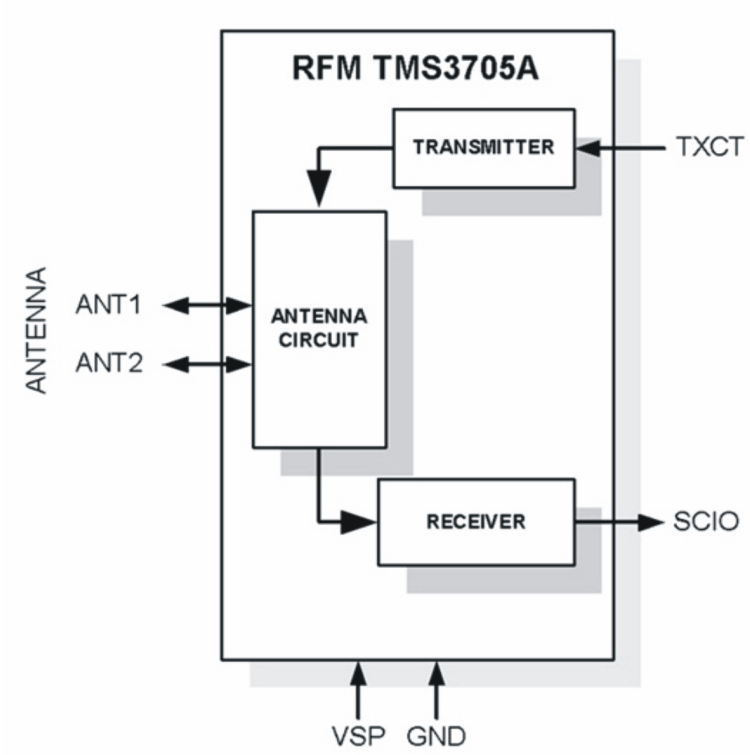

Figure 1-3. RF Module – Block Schematic of TMS3505A IC

1.6 Method of Operation

The Transponder can be used in different modes of operation. This section provides a short overview of these modes and how they work.

1.6.1 Initialization

When the transponder is delivered the password in Page 1 is set to 0xFF. Users may wish to change this to prevent normal Writing or Locking of pages by making the transponder selectively addressable (254 possible addresses).

Furthermore, some data may need to be programmed into memory locations. The system manufacturer has to program and if required, lock the used memory locations in order to protect the data. Locking prevents the memory from being reprogrammed in future. The Lock Bit cannot be reset.

1.6.2 Read Mode (General Read)

In the read mode the interrogator sends the read command to get information about the content of the addressed Page. The content of the addressed Page depends on whether the Page is locked or unlocked and how the transponder is configured (see Table 4-4).

1.6.3 Selective Addressing (Password Protection)

The Password Protection function is enabled when the value in Page 1 is changed to any other value than FF_{hex}. Once set, Writing or Locking of pages is only possible if the password is known.

1.6.4 Special Addressing (Pages 11 and 12)

These 40-bit pages are Read, Programmed and Locked using special addressing.

Functional Description

This chapter describes the memory at the heart of the device. It describes the memory construction and the control circuit, which is described by means of timing diagrams.

Topic **Page**

2.1 Hardware Description **16**
2.2 Memory Architecture **16**

2.1 Hardware Description

The chip at the heart of the transponder has an Analog Front-end (AFE) as core part and a memory. The AFE contains all analog functions, which are controlled by a control circuit.

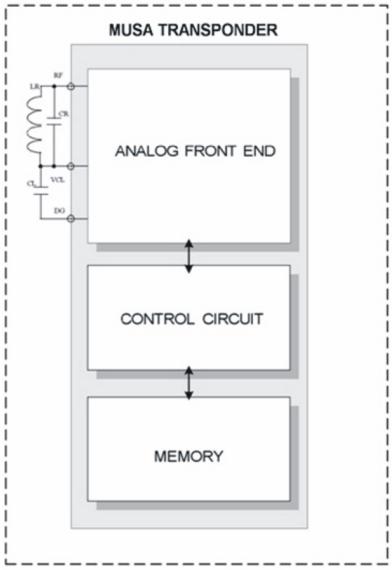

Figure 2-1. Transponder Block Schematic

2.2 Memory Architecture

The MUSA memory contains a selective address, unique serial number and user data, all of which can be accessed by an application and are addressed as Pages (see Table 2-1).

Table 2-1. MUSA Memory Configuration

PAGE	DESCRIPTION	LOCK BIT	MSB		LSB
1	Password		FF_{hex}		
2	User Data 1		00_{hex}		
3	Unique ID	X	Serial Number		Man. Code
8	User Data 2		0000000000_{hex}		
9	User Data 3		0000000000_{hex}		
10	User Data 4		0000000000_{hex}		
11	User Data 5		0000000000_{hex}		
12	User Data 6		0000000000_{hex}		

2.2.1 Page 1 –Password

Page 1 of the memory contains an 8-bit selective address (password) and a selective address lock bit. The selective address is used for selective programming, selective locking and selective reading.

The selective address is programmable by the user (as long as the selective address lock bit is not set) via the program page 1 function. The selective address lock bit can be set by the user, using the lock page 1 command (write address). Once set, the selective address lock bit cannot be reset.

To activate the password feature, the user must write a selective address other than FF_{hex} into page 1. If the selective address in the memory is not FF_{hex}, it will be compared with the selective address received from the interrogator (write phase). If the selective address is FF_{hex} (default) no comparison is performed and password protection is disabled.

When page 1, 2, or 3 is addressed the selective address (page 1) is returned in a consecutive read phase together with the identification (page 2), manufacturer code and serial number (page 3). The status of page 1 lock bit is only returned when page 1 is addressed.

2.2.2 Page 2 –User Data 1

Page 2 of the memory contains 8-bits of user memory (User Data 1) and one locking bit.

The user data 1 memory is programmable by the user (as long as the page 2 lock bit is not set) with program page 2 function. The User Data 1 lock bit can be set by the user, using the lock page 2 command (write address). Once set the identification lock bit cannot be reset.

The contents of the User Data 1 memory (read data) are returned during the read phase (read address), together with the selective address (page 1), the manufacturer code and the serial number (page 3) if page 1, 2 or 3 are addressed. The status of the lock bit is returned when page 2 is addressed.

2.2.3 Page 3 – Unique Identification (Serial No., Man. Code)

Page 3 of the memory contains an 8-bit Manufacturer Code and a 24-bit Serial Number.

The Manufacturer Code is used for distinguishing transponders sold for specific applications or to a specific manufacturer, so that the transponder can only be used for applications of that manufacturer. This feature is available at additional cost. If it is not implemented, the manufacturer code can vary and must be considered as a random number.

The Serial Number is used for numbering the transponder within an application.

The Manufacturer Code is programmed and locked by TI, together with the serial number. The Manufacturer Code and Serial Number cannot be changed.

The contents of the Manufacturer Code together with the Serial Number are returned when page 1, 2, or 3 are addressed, the status of page 3 (locked) is returned when page 3 is addressed.

2.2.4 Pages 8 to 10 –User Data 2, 3, and 4

Pages 8 to 10 are 40-bits of Read, Write or Lockable memory with associated lock bits. Each page can be re-programmed up to 100,000 times but once set, the lock bit cannot be reversed and re-programming is not possible.

2.2.5 Pages 11 and 12 – User Data 5 and 6

Pages 11 and 12 are 40-bit memory locations (User data 5 and 6) with associated lock bits. Reading, Writing and Locking is possible using Special Addressing. If Page 11 is read with a General Read, only Status information is returned and if Page 12 is read with a General Read, only the data in the Least Significant Byte is returned.

User Command Set

This chapter describes the formats that are used when writing to and reading the transponder. It shows examples of timing diagrams of various write data and read data sequences.

Topic **Page**

3.1 MUSA Command Set 20

3.1 MUSA Command Set

Table 3-1 provides an overview of the commands available to address each page of the MUSA Transponder.

Table 3-1. Command Set

Page	Description	COMMAND[1]								
		General Read Page	Program Page	Lock Page	Selective Read Page	Selective Program Page	Selective Lock Page	Special Read Page	Special Program Page	Special Lock Page
1	Password	X	X	X	P	P	P			
2	User Data 1	X	X	X	P	P	P			
3[2]	Serial Number/ Mfr Code	X			P					
8	User Data 2	X	X	X	P	P	P			
9	User Data 3	X	X	X	P	P	P			
10	User Data 4	X	X	X	P	P	P			
11	User Data 5	S						X	X	X
12	User Data 6	L						X	X	X

(1) P = When password is ≠ FF_{hex}, S = Returns status information, L = Returns LS byte only
(2) This page (page 3) is programmed and locked by Texas Instruments during manufacture and cannot be changed.

3.1.1 Pulse Width Modulation

The MUSA uses Pulse Width Modulation (PWM) as the modulation technique used by the reader to transfer data. The data is carried in the duration of the pulse pause (toffL, toffH). Readers must ensure that, in the case of a low bit, the pulse pause (End Of Burst duration) at the transponder (toff) is shorter than the high bit detection time (tHdet) but longer than the minimum allowed pulse pause (toffmin) (see Figure 3-1). The activation phase after a pulse pause (tonL, tonH) is required to recover the energy consumed by the active control and pluck circuit.

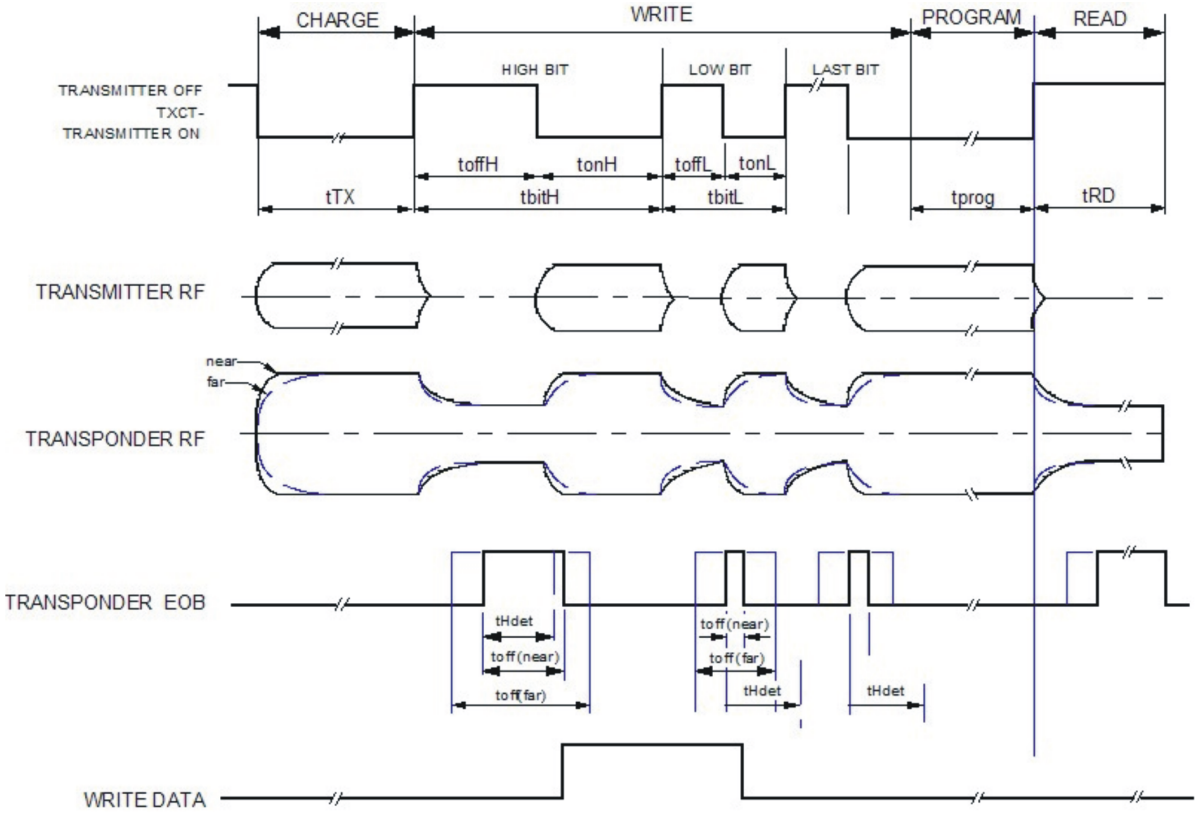

Figure 3-1. PWM in the Case of Writing Data

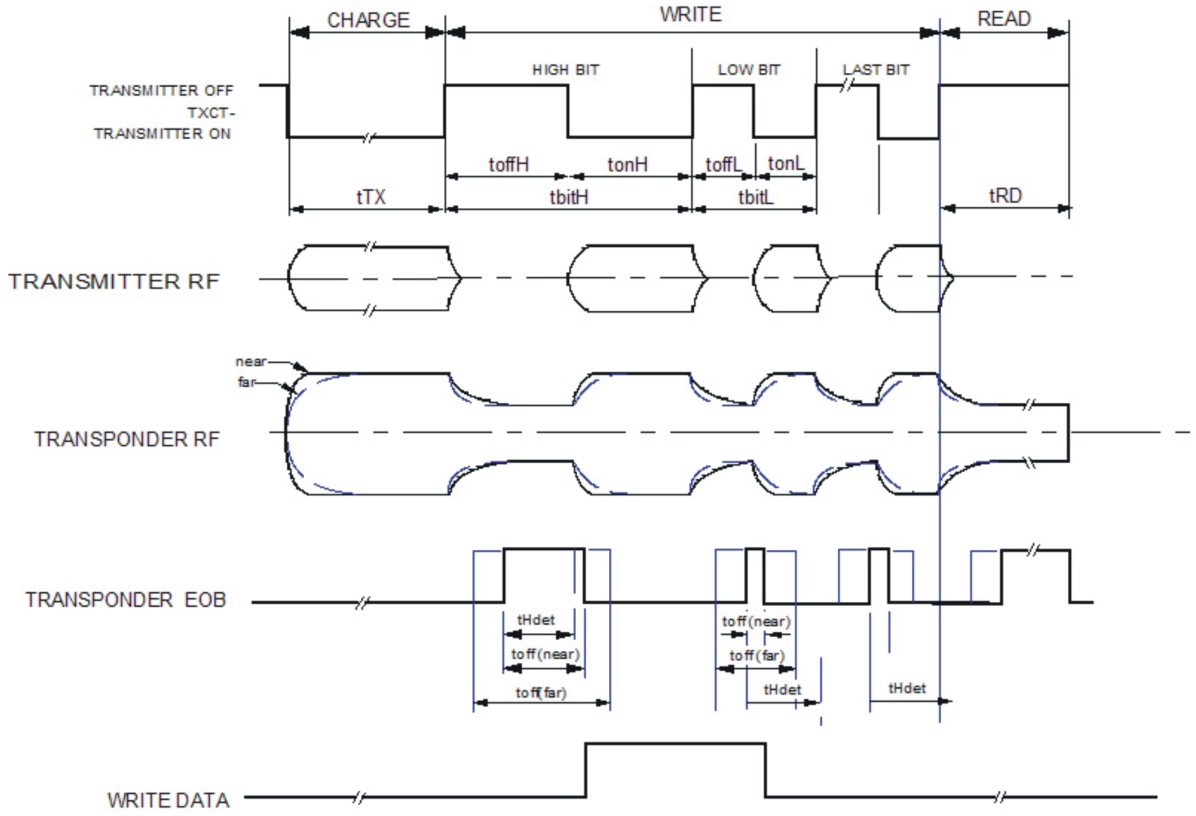

Figure 3-2. PWM in the Case of a General Read

3.1.2 Cyclic Redundancy Check Generator

A Cyclic Redundancy Check (CRC) Generator is used in the transponder during receipt and transmission of data. This generates a 16-Bit Block Check Character (BCC), that conforms to the CRC-CCITT algorithm (see Figure 3-3).

The CRC-Generator consists of 16 shift register cells with 3 exclusive OR gates. One exclusive OR gate combines the input of the CRC-Generator with the output of the shift register (LSB) and feeds back to the input of the shift register. Two of the exclusive OR gates combine certain cell outputs with the output of the first exclusive OR gate and feed into the next cell input.

The CRC Generator is initialized with the value 3791hex.

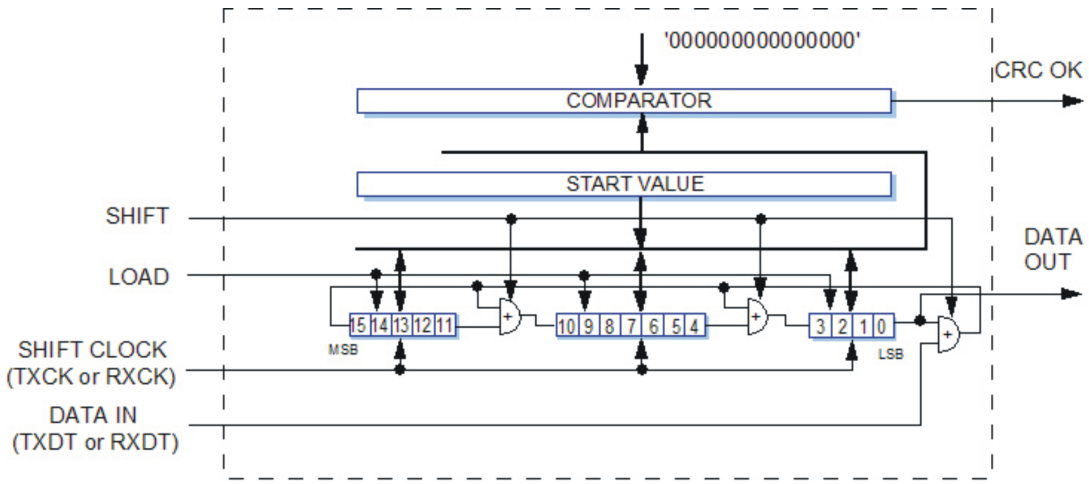

Figure 3-3. Block Schematic of CRC Generator

The CRC generation is started with the first shifted bit, received during write phase RXCK, RXDT. After reception of program or lock command and the additional bits, including the write frame BCC, the CRC Generator content is compared to 0000_{hex} (CRC_OK).

During read function CRC generation is started after transmission of the start byte. After the read data, the serial number, then the signature followed by the read address byte, the CRC Generator content is shifted using the CRC generator as a normal shift register (SHIFT signal).

From a mathematics point of view, the data, which are serially shifted through the CRC Generator with LSB first, are multiplied by 16 and divided by the CRC-CCITT generator polynomial:

$P(X) = X^{16} + X^{12} + X^5 + 1$

The remainder from this division is the Read Frame Block Check Character (Read Frame BCC).

The interrogator control unit has to use the same algorithm to generate the Write Frame BCC and to check the Read Frame BCC received from the transponder. The response is checked by shifting the Read Frame BCC through the CRC generator in addition to the received data; the content of the CRC generator must be zero after this action.

Typically the CRC generator is realized in the control unit by means of software and not hardware. The algorithm can be handled on a bit-by-bit basis (see Figure 3-4) or by using look-up tables.

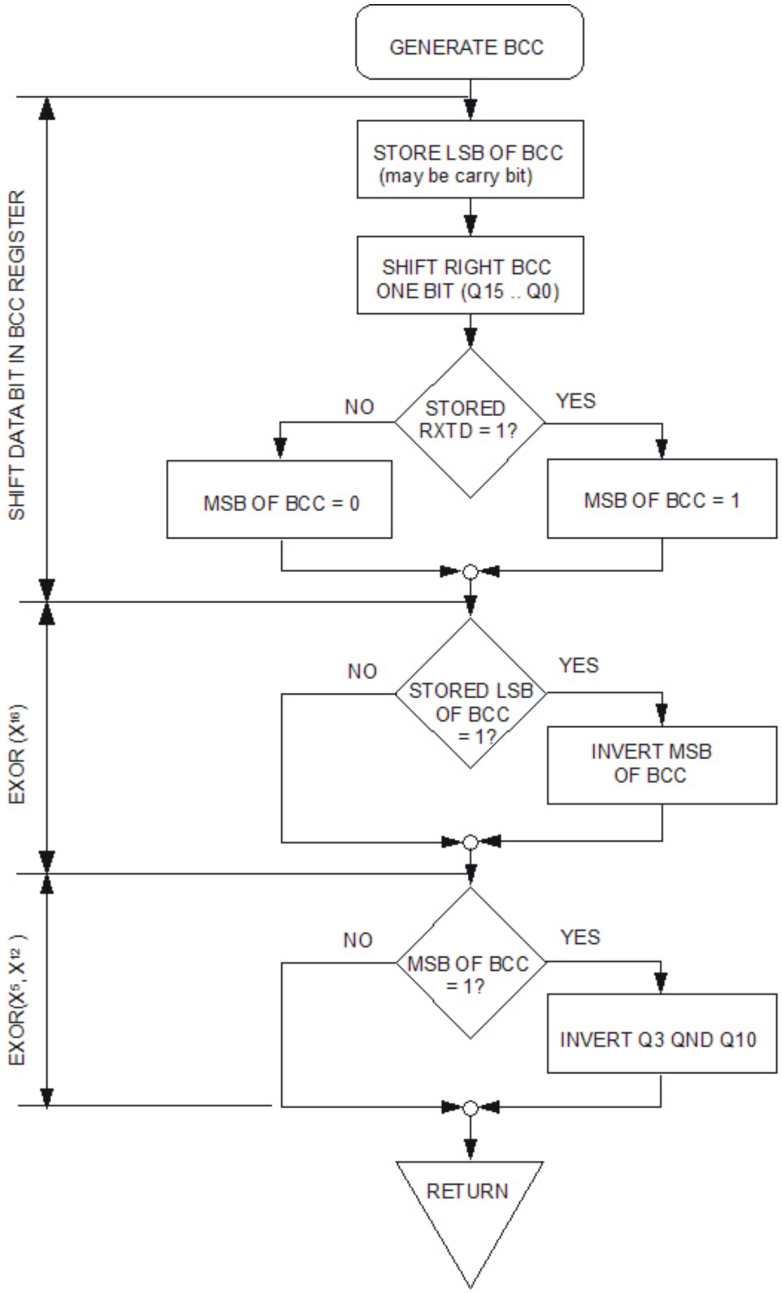

Figure 3-4. Subroutine Generate Block Check Character

Transponder Data Formats

This chapter describes the formats that are used when writing to and reading from the transponder. It shows examples of timing diagrams of various write data and read data sequences.

Topic **Page**

4.1 General 26
4.2 Charge 26
4.3 Write 26
4.4 Read 32

4.1 General

The Texas Instruments FM System uses a sequential function principle separating the transponder powering (charge) and transponder data transmission mode. The advantages of the sequential mode are described in 1.5.1.

4.2 Charge

During the charge (or powering phase) of typically between 15 and 50 ms the interrogator generates an electromagnetic field using a frequency of 134.7 kHz. The resonant circuit of the transponder is energized and the induced voltage is rectified by the integrated circuit to charge the capacitor.

The transponder detects the end of the RF signals and transmits its data using Frequency Shift Keying (FSK), utilizing the energy stored in the capacitor.

4.3 Write

The write function (see Table 4-2 and Table 4-3) is used to transfer commands, addresses and data to the transponder in order to activate certain functions. Writing is started after the charge phase; it is achieved by switching the RF Module's transmitter off and on according to the data bits.

4.3.1 Pulse Width Modulation (PWM)

The duration of the transmitter deactivation, detected by the transponder toff, defines if it is a low bit or a high bit. During a high bit the transmitter is deactivated for toffH and activated afterwards for tonH. During a low bit the transmitter is deactivated for toffL and activated afterwards for tonL. The duration of the deactivation detected by the transponder, must be greater than the high detection threshold time (tHdet). During read page (see Table 4-5) and selective read page function the write phase is followed by a read phase (tRD).

The write bit duration (tbitL, tbitH) consists of the transmitter deactivation time (toffH, toffL) and a transmitter activation time (tonH, tonL), which is necessary to recover the energy lost during toff. The duration of a write bit deactivation defines whether it is a low bit or a high bit.

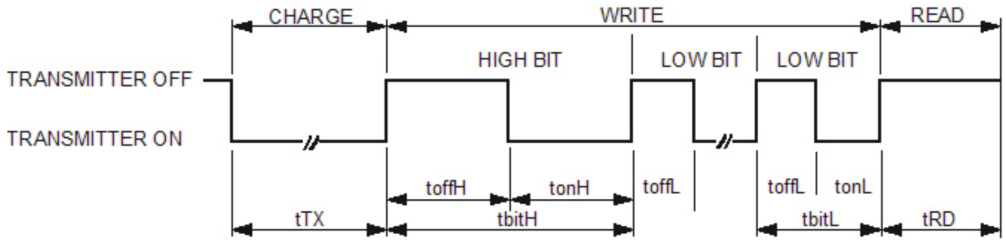

Figure 4-1. Timing of Write Function

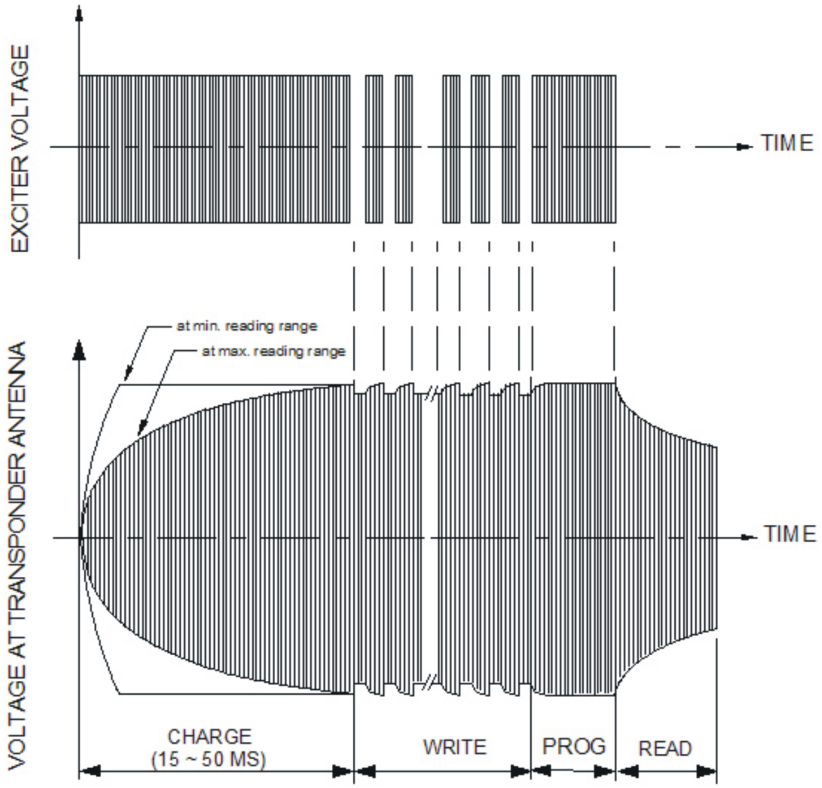

Charge: Continuous RF Module transmitter output signal

Write: PWM of the RF module transmitter output signal

Program: Continuous RF module transmitter output signal

Read: Frequency Shift Keying of the transponder resonant circuit oscillation

Figure 4-2. Voltage at the Reader and Transponder Coils During Typical Function

4.3.2 Write Data Formats

The memory of the MUSA is structured in multiple pages. To initiate a command, the user has to send (Write) a write address to the transponder.

The write address byte consists of a 2-bit command field and a 6-bit page field. The command field, which is transmitted first (LSB first), determines the function to be executed. The page field defines the affected page or function.

The selected function defines if additional data need to be transmitted to the transponder (see Table 4-1).

Table 4-1. Overview of Content of Write Data Formats

Function	Command Field	Page Field	Selective Address	Special Address 1	Special Address 2	Write Data	Frame BCC
General Read Page	00	X					
Selective Read Page	11	X	X				X
Special Addressing Read Page	11	X		X	X		X
Program Page	01	X				X	X
Selective Program Page	01	X	X			X	X
Special Addressing Program Page	01	X		X	X	X	X
Lock Page	10	X					X
Selective Lock Page	10	X	X				X
Special Addressing Lock Page	10	X		X	X		X

Table 4-2. Write Address Combinations of Page and Command

	WRITE ADDRESS		
	MSB **PPPPPP** **I** **Page Field** **MSB LSB**	**LSB** **CC** **I** **Command Field** **MSB LSB**	**Hex - Command**
Page 1	000001	00	General Read Page 1
	000001	01	Program/Selective Program Page 1
	000001	10	Lock/Selective Lock Page 1
	000001	11	Selective Read Page 1
Page 2	000010	00	General Read Page 2
	000010	01	Program/Selective Program Page 2
	000010	10	Lock/Selective Lock Page 2
	000010	11	Selective Read Page 2
Page 3	000011	00	General Read Page 3
	000011	11	Selective Read Page 3
Page 8	001000	00	General Read Page 8
	001000	01	Program/Selective Program Page 8
	001000	10	Lock/Selective Lock Page 8
	001000	11	Special Addressing Read Page 8
Page 9	001001	00	General Read Page 9
	001001	01	Program/ Selective Program Page 9
	001001	10	Lock/ Selective Lock Page 9
	001001	11	Special Addressing. Read Page 9
Page 10	001010	00	General Read Page 10
	001010	01	Program/Selective Program Page 10
	001010	10	Lock/Selective Lock Page 10
	001010	11	Special Addressing. Read Page 10
Page 11	001011	00	Get Status Page 11
	001011	01	Special Addressing Program Page 11
	001011	10	Special Addressing Lock Page 11
	001011	11	Special Addressing Read Page 11
Page 12	001011	00	General Read Page 12 (LSB only)
	001011	01	Special Addressing Program Page 12
	001011	10	Special Addressing Lock Page 12
	001011	11	Special Addressing Read Page 12

A summary Table of the complete Write Addresses is shown in Table 4-3.

Table 4-3. Summary of Write Addresses

OPERATION	PAGE							
	1	2	3	8	9	10	11	12
General Read	04	08	0C	20	24	28	2C	30
Write/Selective Write	05	09		21	25	29		
Lock/Selective Lock	06	0A		22	26	2A		
Selective Read	07	0B	0F	23	27	2B		
Special Addressing Write							2D	31
Special Addressing Lock							2E	32
Special Addressing Read							2F	33

The protocol Write format timings for the MUSA are shown in Figure 4-3 to Figure 4-13.

4.3.2.1 General Read Page 1 to 12

The Write Data Format of General Read Page 1 to 12 follows

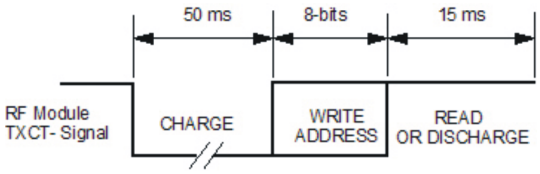

Figure 4-3. Format of General Read Pages 1 to 12

4.3.2.2 Selective Read Page 1 to 10

The Write Data Format of Selective Read of Pages 1 to 10 follows:

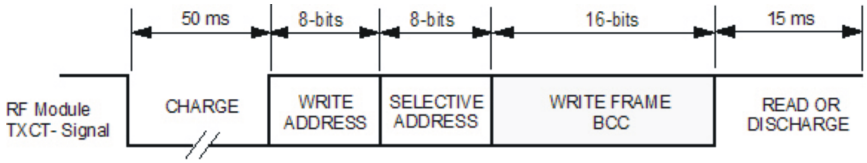

Figure 4-4. Format of Selective Read Page

4.3.2.3 Special Addressing Read Page 11 and 12

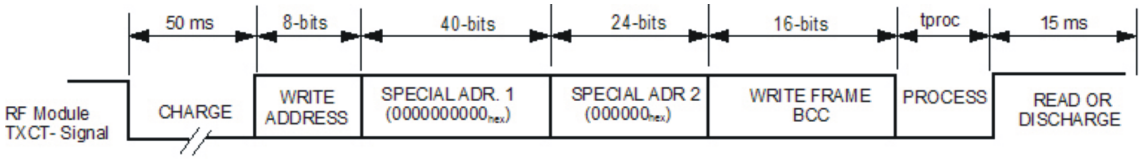

Figure 4-5. Format of Special Addressing Read

4.3.2.4 Program Page 1 and 2

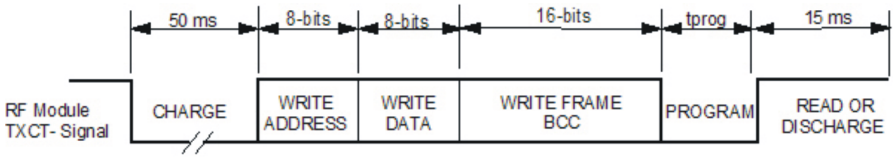

Figure 4-6. Format of Program Page 1 and 2

4.3.2.5 Selective Program Page 1 and 2

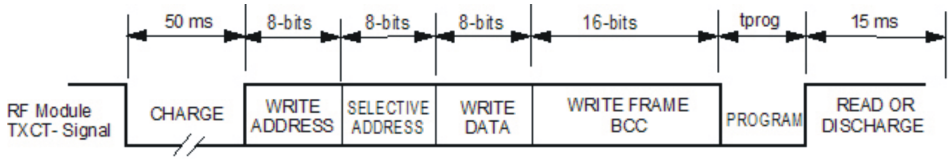

Figure 4-7. Format of Selective Program Page 1 and 2

4.3.2.6 Program Page 8 to 10

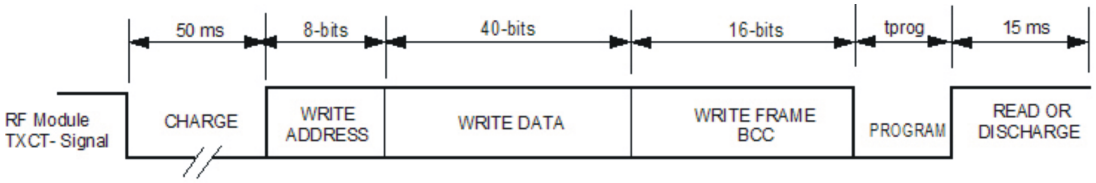

Figure 4-8. Format of Program Page 8 to 10

4.3.2.7 Selective Program Page 8 to 10

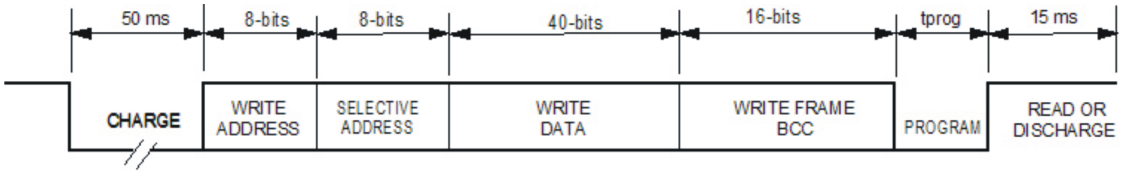

Figure 4-9. Format of Selective Program Page 8 to 10

4.3.2.8 Special Addressing Program Page 11 and 12

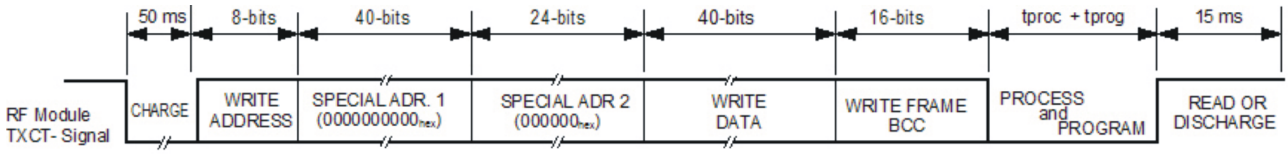

Figure 4-10. Format of Special Addressing Program Pages 11 and 12

4.3.2.9 Lock Page

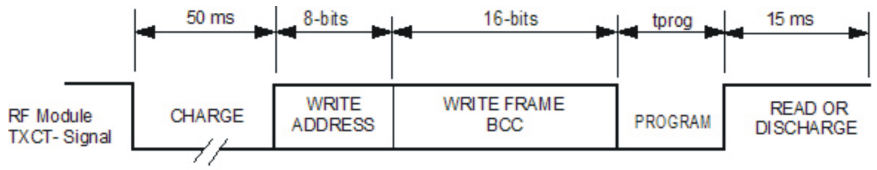

Figure 4-11. Format of General Lock Page

4.3.2.10 Selective Lock Page

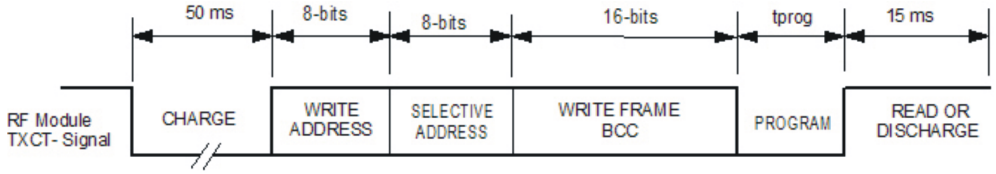

Figure 4-12. Format of Selective Lock Page

4.3.2.11 Special Addressing Lock, Page 11 and 12

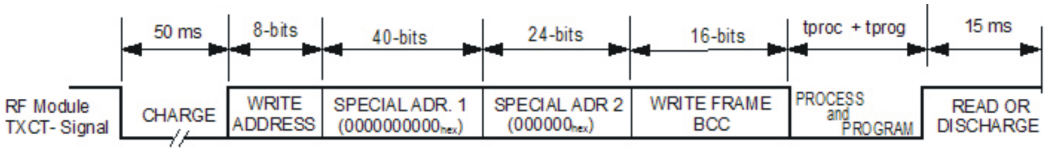

Figure 4-13. Format for Special Addressing Lock Page

4.4 Read

The Read phase starts with each deactivation of the transmitter, which is detected by the transponder, because the transponder resonant circuit RF amplitude drops. The transponder starts with transmission of 16 Pre-bits. During this phase the resonant circuit resonates with the low bit transmit frequency (fL). During transmission of the read data or response, the resonant circuit frequency is shifted between the low bit transmit frequency (fL) and the high bit transmit frequency (fH).

The typical data low bit frequency is 134.7 kHz and the typical data high bit frequency is 123.7 kHz. The low and high bits have different durations, because each bit takes 16 RF cycles to transmit.

The high bit has a typical duration of 129.3 µs, the low bit of 118.8 µs. Figure 4-14 shows the FM principle used. Regardless of the number of low and high bits, the transponder response duration is always less than 15 ms.

Data encoding is done in NRZ mode (Non Return to Zero). The clock is derived from the RF carrier by a divide-by-16 function.

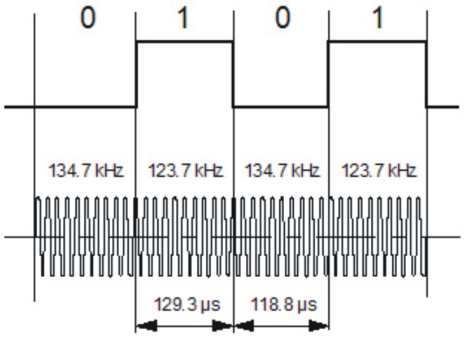

Figure 4-14. FM Principle Used for the Read Function of Transponders

After a charge phase only (without write phase), the transponder discharges its capacitor at the end of the Pre-bit phase, which results in no response. If a valid function was detected during the write phase, the complete read data format is transmitted. The content of the read data format depends on the previously executed function.

When the last bit has been sent, the capacitor is discharged. During discharge no charge-up is possible.

A sufficiently long read time (tRD) must be provided to ensure that the complete read data format can be received (allowing also for possible transponder response frequency deviations).

4.4.1 Read Data Formats

During the response phase (Read), the Transponder transmits a 96-bit Read Data Format. The content of the response frame depends on the addressed page (see Table 4-5 and Table 4-6). All Read Data Formats start with 16 Pre-Bits and an 8-bit Start Byte and end with the 8-bit Read Address and the 16-bit Read Frame BCC. All parts of a Read Data Format are transmitted with LSB first (see Figure 4-15 to Figure 4-18).

Table 4-4. Overview of the Content of Read Data Formats

PAGE	READ DATA FORMAT BYTE					
	4	5	6	7	8	9
1	Sel. Addr.	User Data 1	Man. Code	Serial No.	Serial No.	Serial No.
2	Sel. Addr.	User Data 1	Man. Code	Serial No.	Serial No.	Serial No.
3	Sel. Addr.	User Data 1	Man. Code	Serial No.	Serial No.	Serial No.
8	User Data 1	User Data 2	User Data 2	User Data 2	User Data 2	User Data 2
9	User Data 1	User Data 3	User Data 3	User Data 3	User Data 3	User Data 3
10	User Data 1	User Data 4	User Data 4	User Data 4	User Data 4	User Data 4
11	User Data 1	User Data 5	User Data 5	User Data 5	User Data 5	User Data 5
12	User Data 1	User Data 6	User Data 6	User Data 6	User Data 6	User Data 6

The meaning of the Page and Status field depends on the addressed Page (see Table 4-5).

Table 4-5. Meaning of Page and Status Field in the Read Address

	WRITE ADDRESS		
	MSB PPPPPP I Page Field	LSB CC I Command Field	
	MSB LSB	MSB LSB	Hex - Status
Page 1	000001	00	04 - Read unlocked page
	000001	01	05 - Programming done
	000001	10	06 - Read locked page
	000000	00	00 - Read unlocked Page, locking not correctly executed
	000000	01	01 - Programming done, but possibly not reliable
	000000	10	02 - Read locked Page, but locking possibly not reliable
Page 2	000010	00	Read unlocked page
	000010	01	Programming done
	000010	10	Read locked page
	000000	00	Read unlocked Page, locking not correctly executed
	000000	01	Programming done, but possibly not reliable
	000000	10	Read locked Page, but locking possibly not reliable
Page 3	000011	00	Read unlocked page
	000011	01	Programming done
	000011	10	Read locked page
	000000	00	Read unlocked Page, locking not correctly executed
	000000	01	Programming done, but possibly not reliable
	000000	10	Read locked Page, but locking possibly not reliable
Page 8	001000	00	Read unlocked Page/ Page is unlocked
	001000	01	Programming done
	001000	10	Read locked Page/ Page is locked
	000000	00	Read unlocked Page, locking not correctly executed
	000000	01	Programming done, but possibly not reliable
	000000	10	Read locked Page, but locking possibly not reliable
Page 9	001001	00	Read unlocked Page/ Page is unlocked
	001001	01	Programming done
	001001	10	Read locked Page/ Page is locked
	000000	00	Read unlocked Page, locking not correctly executed
	000000	01	Programming done, but possibly not reliable
	000000	10	Read locked Page, but locking possibly not reliable
Page 10	001010	00	Read unlocked Page/ Page is unlocked
	001010	01	Programming done
	001010	10	Read locked Page/ Page is locked
	000000	00	Read unlocked Page, locking not correctly executed
	000000	01	Programming done, but possibly not reliable
	000000	10	Read locked Page, but locking possibly not reliable
Page 11	001011	00	Page is unlocked/ Special Addressing Read done
	001011	01	Programming done
	001011	10	Page is locked/ Special Addressing Read done
	000000	00	Read unlocked Page, locking not correctly executed

Table 4-5. Meaning of Page and Status Field in the Read Address (continued)

	WRITE ADDRESS		
	MSB PPPPPP I Page Field MSB LSB	LSB CC I Command Field MSB LSB	Hex - Status
	000000	01	Programming done, but possibly not reliable
	000000	10	Read locked Page, but locking possibly not reliable
Page 12	001100	00	Page is unlocked, Special Addressing Read done/ LSB only
	001100	01	Programming done
	001100	01	Page is locked, Special Addressing Read done/ LSB only
	000000	00	Read unlocked Page, locking not correctly executed
	000000	01	Programming done, but possibly not reliable
	000000	10	Read locked Page, but locking possibly not reliable

A summary Table of the Read Addresses is given in Table 4-6.

Table 4-6. Summary of Read Addresses

RESPONSE CODE MEANING	PAGE							
	1	2	3	8	9	10	11	12
Read unlocked page	04	08	0C	20	24	28	2C	30
Programming OK	05	09		21	25	29	2D	31
Read locked page	06	0A		22	26	2A	2E	32
Read unlocked page – lock failed	00	00		00	00	00	00	00
Write complete – but Write unreliable	01	01		01	01	01	01	01
Read unlocked page – lock unreliable	02	02		02	02	02	02	02

4.4.1.1 Response to Read of Page 1, 2, or 3

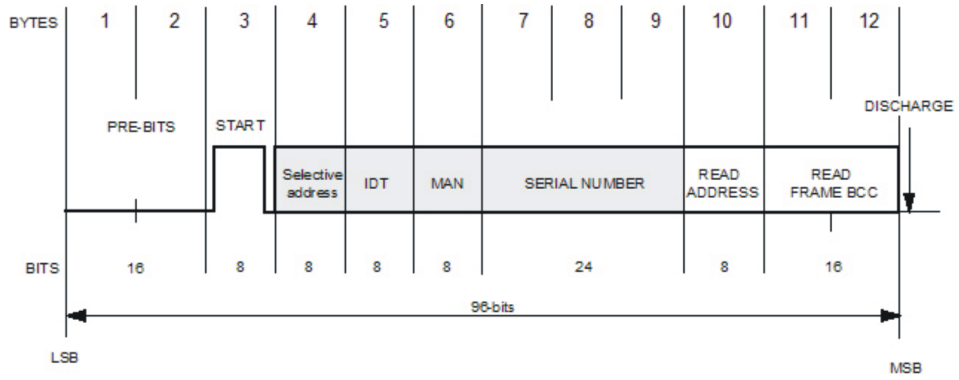

Figure 4-15. Response to Read of Pages 1, 2, or 3

4.4.1.2 4Response to Read of Page 8 to 12

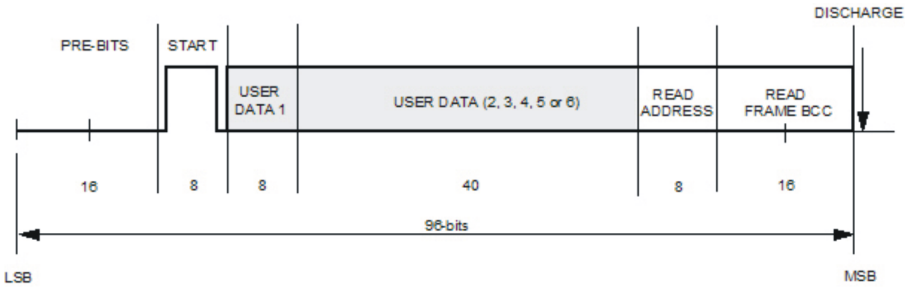

Figure 4-16. Response to Read of Pages 8 to 12

4.4.1.3 Response to General Read of Page 11

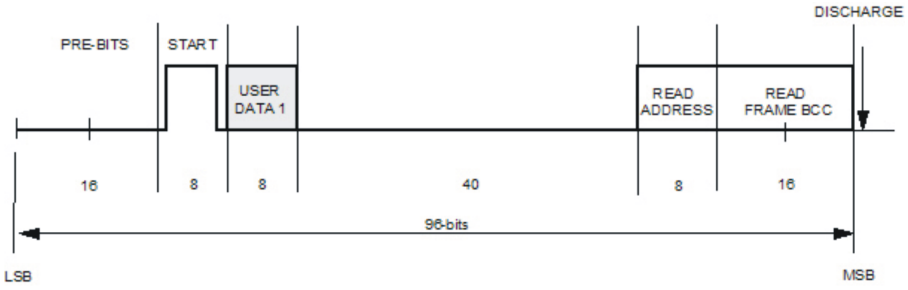

Figure 4-17. Response to General Read of Page 11 (Status)

4.4.1.4 Response to General Read of Page 12

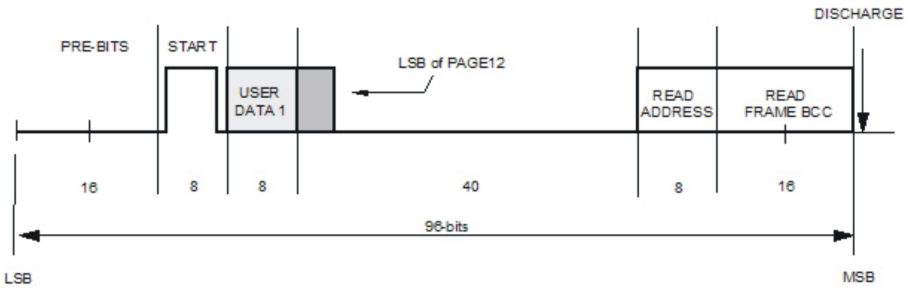

Figure 4-18. Response to General Read of Page 12 (LSByte)

Measurement Setups

This chapter describes typical measurement setups to determine the relevant transponder data like: resonant frequency, bandwidth, quality factor, powering field strength and transponder signal field strength as listed in section 6.3 *Recommended Operating Conditions*.

Topic **Page**

5.1 Resonance Frequency, Bandwidth, Q Factor **38**
5.2 Powering Field Strength **39**
5.3 Transponder Signal Strength **40**

5.1 Resonance Frequency, Bandwidth, Q Factor

This test setup is suitable for resonant frequency (f_{res}) measurements as well as the determination of the –3 dB bandwidth (Δf) of the transponder. The quality factor Q of the transponder resonance circuit can be calculated with equation (1):

$$Q = \frac{f_{res}}{\Delta f} \quad (1)$$

The wires of the pick-up coil should be very thin in order to avoid influence on the measurement results (for example: by damping). The choice of a 1 MΩ input resistor at the spectrum analyzer is recommended. Figure 5-1 shows the test setup. The relation between pick-up coil voltage and frequency is shown in Figure 5-2.

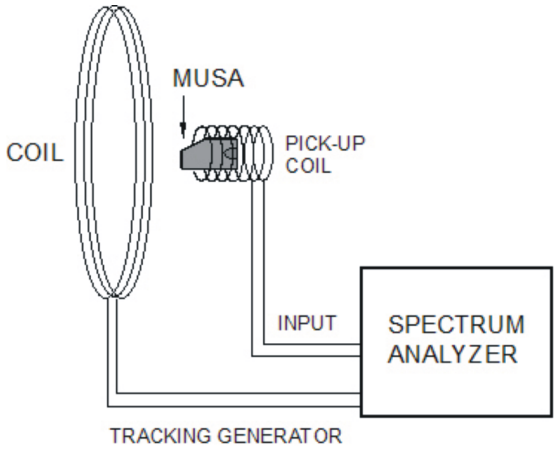

Figure 5-1. Setup to Determine MUSA. Resonance Frequency, Bandwidth and Quality Factor

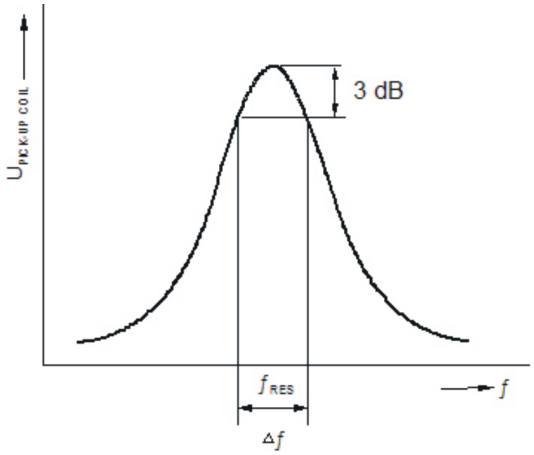

Figure 5-2. Determining Res. Freq. and –3 dB BW by Monitoring the Pick-Up Coil Voltage

5.2 Powering Field Strength

The setup shown in Figure 5-3 is used to determine the minimum required powering field strength.

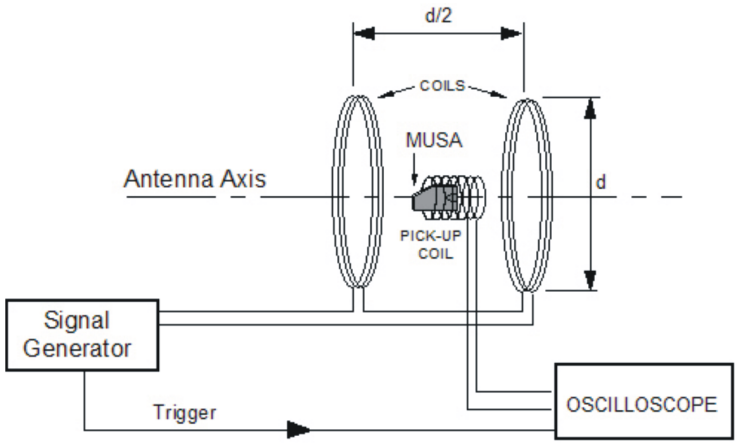

Figure 5-3. Test Setup for Powering Field Strength Determination

The field between both serially connected coils is homogeneous, due to the fact that the aperture is built according to the Helmholtz setup. The circular coils are positioned in parallel on one axis. The distance between the coils is half the coil diameter. The transponder is positioned in the middle of the coil axis.

Determination of the minimum powering field strength is possible by changing the field strength through increasing the coil current. The relationship between the generated magnetic flux/field strength and coil current can either be measured with a calibrated field probe, or calculated as follows:

$$B = \frac{4}{5} \bullet \sqrt{\frac{4}{5}} \bullet \frac{\mu_o \bullet \mu_r \bullet N \bullet I}{d/2} = \mu_o \bullet \mu_r \bullet H \quad (2)$$

B: magnetic flux (Tesla = Wb/m2)

H: magnetic field strength (A/m)

N: Number of Helmholtz Coil windings

d: Coil diameter (m)

I: Coil current (A)

μ_o: magnetic field constant (Vs/Am) = $4 \times p \times 10^{-7}$ Vs/Am

μ_r: relative magnetic field constant (in air: = 1)

The Helmholtz setup can be used for the specification of transponders in the temperature range from –40 to 85°C. Tests showed, however, that deviations of the field strength caused by temperature are negligible.

The data telegram of the transponder can be captured by a pick-up coil (for example: 10 windings, thin wire to minimize influence) which wraps the transponder. The pulse-modulated signal can be adjusted at the signal generator. The measurement of the power pulse and transponder diagram can be done with the help of an oscilloscope triggered by the generator signal (see Figure 5-4). As soon as a data telegram is completely detected the minimum necessary field strength (calculated with equation 2) can be monitored.

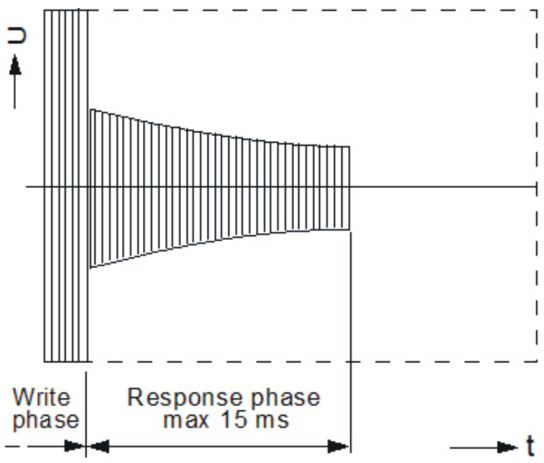

Figure 5-4. Received Signal at the Pick-up Coil, If Power Field Strength Is Sufficient

5.3 Transponder Signal Strength

The transponder has to be located in a homogeneous field (Helmholtz setup). The pulsed power signal is generated by a signal generator. A calibrated field strength probe picks up the transponder signal. The field strength can be calculated by using the calibration factor of the field strength probe.

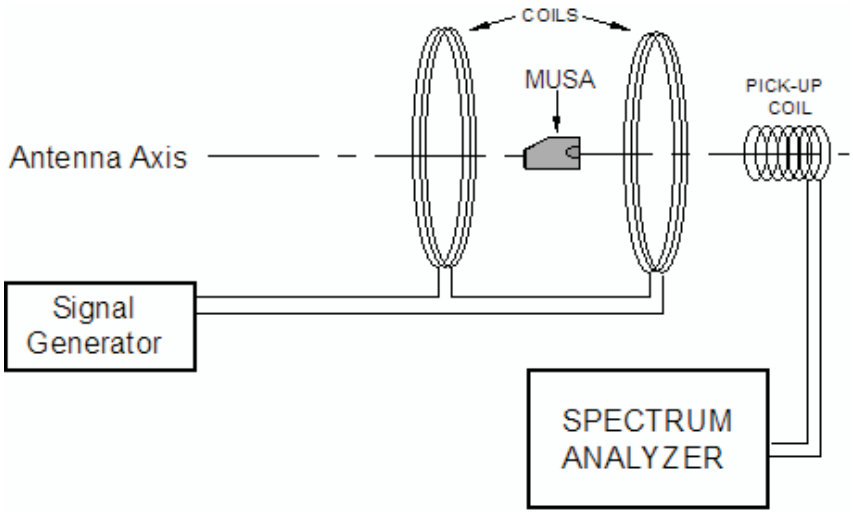

Figure 5-5. Determining Tsp. (Data Transmission) Signal Strength Helmholtz Aperture

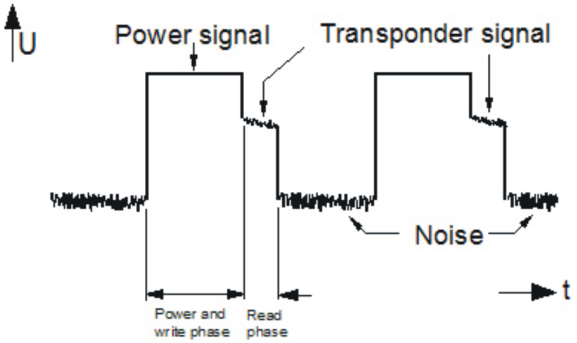

Figure 5-6. Monitored Signal Voltage at the Spectrum Analyzer (Time Domain Mode)

Specifications

This chapter provides the entire product specifications that you need to know in order to integrate the device into your system.

Topic **Page**

6.1 Absolute Maximum Ratings 42
6.2 Reader Conditions 42
6.3 Recommended Operating Conditions 43
6.4 Transponder Characteristics 43
6.5 Environmental Data and Reliability 44
6.6 Memory 45
6.7 Packaging 46

6.1 Absolute Maximum Ratings

All data given is for free air operating temperature range (unless otherwise noted).

CAUTION

Stresses beyond those listed under “Absolute Maximum Ratings” may cause permanent damage to the device. These are stress ratings only and functional operation of the device at these or other conditions beyond those indicated under “Recommended Operating Conditions” is not implied. Exposure to Absolute Maximum Rating conditions for extended period may affect device reliability.

Table 6-1. Absolute Maximum Operating Conditions

PARAMETER		CONDITION	MIN	NOM	MAX	UNIT
Operating temperature (read)	Ta_{read}		–40		85	°C
Operating temperature (program)	Ta_{Prog}		–40		85	°C
Storage temperature	T_s	one cycle up to 1000h	–40		100	°C
Field strength	H_{exc}	134.7 kHz			178	dBµA/m

6.2 Reader Conditions

Table 6-2. Reader Conditions

PARAMETER		NOTE	MIN	NOM	MAX	UNIT
Transmitter frequency	fTX		134.16	134.2	134.24	kHz
Charge Time	fTX		15	50		ms
Programming Time	tprog		15		20	ms
Special Addressing Process Time	tproc		7			ms
Read Time	tRD		14.9	15		ms
ASK modulation index (write)	mwrite			100		%
Write Low Bit Duration	tbitL		0.45	0.5		ms
Write High Bit Duration	tbitH		0.95	1		ms

6.3 Recommended Operating Conditions

All data given is for free air operating temperature range, a charge time of 50 ms, and a transmitter frequency of 134.2 kHz ± 40 Hz (unless otherwise noted).

Table 6-3. Transponder Conditions

PARAMETER		NOTE	MIN	NOM	MAX	UNIT
Max. Operating Field strength	Hmax				168	dBµA/m
Field strength to avoid Programming	H no_prg				123	dBµA/m
Operating quality factor	Qop		30			
Activation Field strength	Hact	@25°C				dBµA/m
		Charge time 50 ms, Qop > 60	141,5			dBµA/m
		Charge time 50 ms, Qop ≥ 30	147,5			dBµA/m
		Charge time 15 ms, Qop > 60	147,5			dBµA/m
		Charge time 15 ms, Qop ≥ 30	153,5			dBµA/m
Programming Activation Field strength	Hprog	@25°C				dBµA/m
		Charge time 50 ms, Qop > 60	141,5			dBµA/m
		Charge time 50 ms, Qop ≥ 30	147,5			dBµA/m
		Charge time 15 ms, Qop > 62	147,5			dBµA/m
		Charge time 15 ms, Qop ≥ 30	153,5			dBµA/m

6.4 Transponder Characteristics

All data given for free air operating temperature range, a charge time of 50 ms, and a transmitter frequency of 134.2 kHz ± 40 Hz (unless otherwise noted).

Table 6-4. Transponder Characteristics

PARAMETER		CONDITION	MIN	NOM	MAX	UNIT
Q factor Transponder	QTRP	25°C	72			
		–40°C to 85°C	64			
Low bit transmit frequency	f_L	–40°C to 85°C	130.2		139.5	kHz
Low bit transmit frequency	f_L	25°C	132.0	134.7	136.5	kHz
Low bit duration	t_L		0.115	0.119	0.123	ms
High bit transmit frequency	f_H	–40°C to 85°C	118		128	kHz
High bit transmit frequency	f_H	25°C	120.0	123.7	126.5	kHz
High bit duration	t_H		0.125	0.129	0.136	ms
Transponder output field strength at 5 cm	H_{out}	Qop>60	76		99.5	dBµA/m
FSK Modulation index (read); $f_L - f_H$	m_{read}	25°C		11		kHz
FSK Modulation index (read); $f_L - f_H$	m_{read}		9		15	kHz
Data transmission rate (read)	r_{read}		7.4		8.7	kbit/s
Data transmission time (read)	t_{read}		11		13	Ms

6.5 Environmental Data and Reliability

Table 6-5. Environmental Data and Reliability

PARAMETER		CONDITION	MIN	NOM	MAX	UNIT
Programming cycles	Note 1	25°C	100 k			cycles
Data retention time 10 h, ta = 250°C, AE = 0.8 eV		25°C	10			years
ESD Immunity	IEC 801-2		±2			kV
Vibration	IEC 68-2-6, Test Fc F = 10 to 2000 Hz					
Shock	IEC 68-2-27, Test Ea					

6.6 Memory

Table 6-6. Memory Data

PARAMETER	DATA
Memory Size	248 bits (including page 3)
Memory Organization	8 pages
Fixed Identification Data	8-bit Manufacturer Code, 32-bit Serial Number

The default data programmed in the transponder upon delivery is given below:

Table 6-7. Default Data Values

PAGE	LOCK BIT	FUNCTION	PAGE CONTENTS
1	0	Password (Selective Address)	FF_{hex}
2	0	User Data 1, 8-bits	00_{hex}
3[(1)]	Locked	Serial Number, 24-bits Manufacturer Code, 8-bits	XXXXXX_{hex} XX_{hex}
8	0	User Data 2, 40-bits	0000000000_{hex}
9	0	User Data 3, 40-bits	0000000000_{hex}
10	0	User Data 4, 40-bits	0000000000_{hex}
11	0	User Data 5, 40-bit	0000000000_{hex}
12	0	User Data 6, 40-bits	0000000000_{hex}

(1) Programmed and locked during manufacture to ensure uniqueness. From time to time Texas Instruments will change the MFG code.

6.7 Packaging

Table 6-8. Package Data

PARAMETER	DATA
Dimensions	12 mm × 6 mm × 3 mm (see Figure 1-2)
Weight	0.4 g

Conversion Formulae

Conversion formula between magnetic flux, magnetic field strength and electric field strength.

$B = \mu_0 H$

$E = Z_F H$

$$H = \left(\frac{E}{dB\mu V/m} - 51.5 \right) dB\mu V/m$$

$$(H) = \frac{dB\mu A}{m}, (E) = \frac{dB\mu V}{m}$$

B = magnetic flux [Tesla = Wb/m^2 = Vs/m^2]; 1 $\mu W/m^2$ = 1 μT = 0,795 A/m

H = magnetic field strength [A/m or in logarithmic term dBμA/m]

E = electrical field strength [V/m or in logarithmic term dBμV/m]

μ_0 = magnetic field constant = 1.257×10^{-6} Vs/Am

Z_F = free space impedance = 120 $\pi\Omega$ = 377 Ω

IMPORTANT NOTICE

Texas Instruments Incorporated and its subsidiaries (TI) reserve the right to make corrections, modifications, enhancements, improvements, and other changes to its products and services at any time and to discontinue any product or service without notice. Customers should obtain the latest relevant information before placing orders and should verify that such information is current and complete. All products are sold subject to TI's terms and conditions of sale supplied at the time of order acknowledgment.

TI warrants performance of its hardware products to the specifications applicable at the time of sale in accordance with TI's standard warranty. Testing and other quality control techniques are used to the extent TI deems necessary to support this warranty. Except where mandated by government requirements, testing of all parameters of each product is not necessarily performed.

TI assumes no liability for applications assistance or customer product design. Customers are responsible for their products and applications using TI components. To minimize the risks associated with customer products and applications, customers should provide adequate design and operating safeguards.

TI does not warrant or represent that any license, either express or implied, is granted under any TI patent right, copyright, mask work right, or other TI intellectual property right relating to any combination, machine, or process in which TI products or services are used. Information published by TI regarding third-party products or services does not constitute a license from TI to use such products or services or a warranty or endorsement thereof. Use of such information may require a license from a third party under the patents or other intellectual property of the third party, or a license from TI under the patents or other intellectual property of TI.

Reproduction of TI information in TI data books or data sheets is permissible only if reproduction is without alteration and is accompanied by all associated warranties, conditions, limitations, and notices. Reproduction of this information with alteration is an unfair and deceptive business practice. TI is not responsible or liable for such altered documentation. Information of third parties may be subject to additional restrictions.

Resale of TI products or services with statements different from or beyond the parameters stated by TI for that product or service voids all express and any implied warranties for the associated TI product or service and is an unfair and deceptive business practice. TI is not responsible or liable for any such statements.

TI products are not authorized for use in safety-critical applications (such as life support) where a failure of the TI product would reasonably be expected to cause severe personal injury or death, unless officers of the parties have executed an agreement specifically governing such use. Buyers represent that they have all necessary expertise in the safety and regulatory ramifications of their applications, and acknowledge and agree that they are solely responsible for all legal, regulatory and safety-related requirements concerning their products and any use of TI products in such safety-critical applications, notwithstanding any applications-related information or support that may be provided by TI. Further, Buyers must fully indemnify TI and its representatives against any damages arising out of the use of TI products in such safety-critical applications.

TI products are neither designed nor intended for use in military/aerospace applications or environments unless the TI products are specifically designated by TI as military-grade or "enhanced plastic." Only products designated by TI as military-grade meet military specifications. Buyers acknowledge and agree that any such use of TI products which TI has not designated as military-grade is solely at the Buyer's risk, and that they are solely responsible for compliance with all legal and regulatory requirements in connection with such use.

TI products are neither designed nor intended for use in automotive applications or environments unless the specific TI products are designated by TI as compliant with ISO/TS 16949 requirements. Buyers acknowledge and agree that, if they use any non-designated products in automotive applications, TI will not be responsible for any failure to meet such requirements.

Following are URLs where you can obtain information on other Texas Instruments products and application solutions:

Products		**Applications**	
Amplifiers	amplifier.ti.com	Audio	www.ti.com/audio
Data Converters	dataconverter.ti.com	Automotive	www.ti.com/automotive
DSP	dsp.ti.com	Broadband	www.ti.com/broadband
Interface	interface.ti.com	Digital Control	www.ti.com/digitalcontrol
Logic	logic.ti.com	Military	www.ti.com/military
Power Mgmt	power.ti.com	Optical Networking	www.ti.com/opticalnetwork
Microcontrollers	microcontroller.ti.com	Security	www.ti.com/security
RFID	www.ti-rfid.com	Telephony	www.ti.com/telephony
Low Power Wireless	www.ti.com/lpw	Video & Imaging	www.ti.com/video
		Wireless	www.ti.com/wireless

Mailing Address: Texas Instruments, Post Office Box 655303, Dallas, Texas 75265
Copyright © 2007, Texas Instruments Incorporated